Worm Drive Performance Data		
Rated Output Speed	< 2.5 rpm	
Output Torque（Max.）	34.2 kN.m	25240lbf.ft
Tilting Moment Torque（Max.）	310kN.m	229× 10^3lbf.ft
Holding Torque	158.3 kN.m	117× 10^3lbf.ft
Axial Load（Max.）	1850 kN	416× 10^3lbf
Radial Load（Max.）	690kN	155× 10^3lbf
Ratio of Worm Gear	104:1	
Tracking Precision	≤ 0.1 °	
Efficiency	40%	

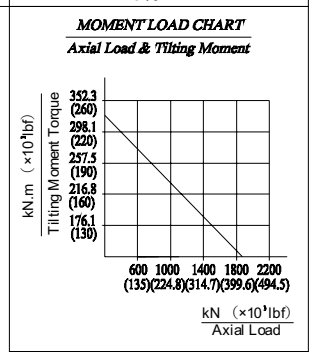

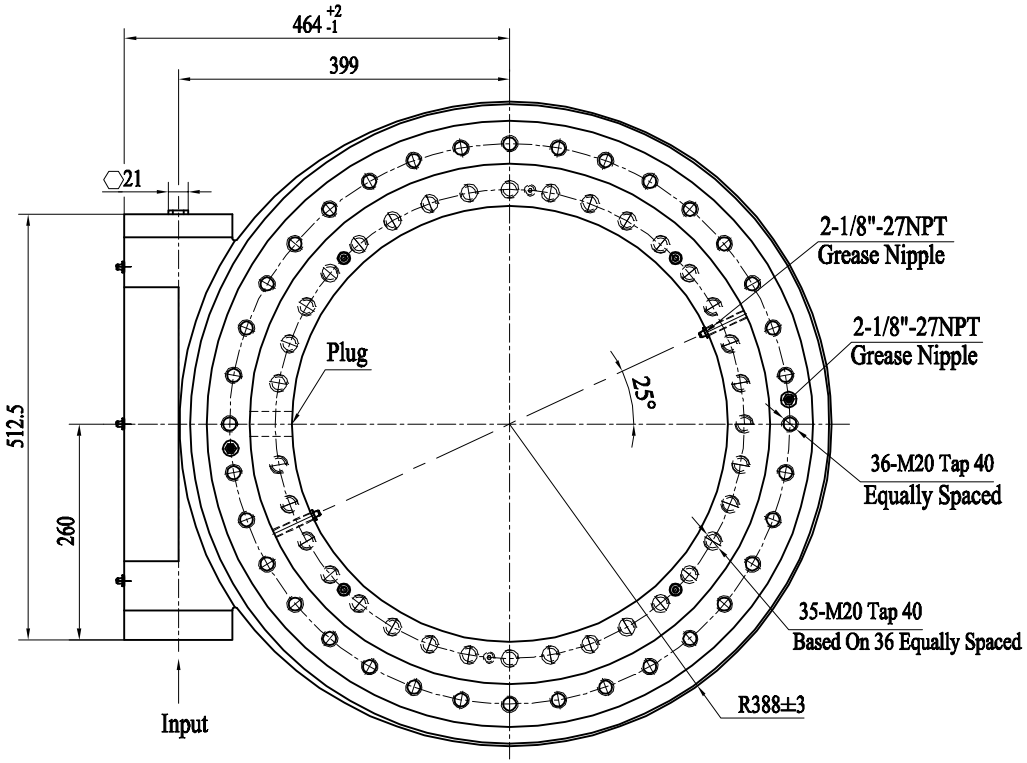

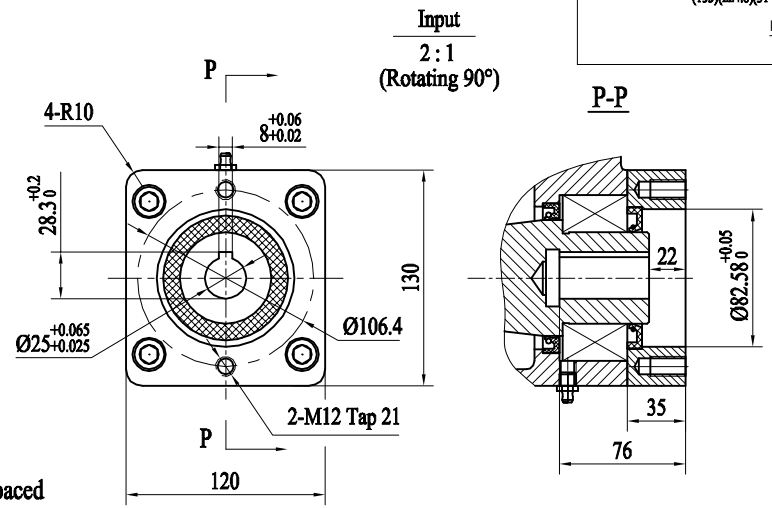

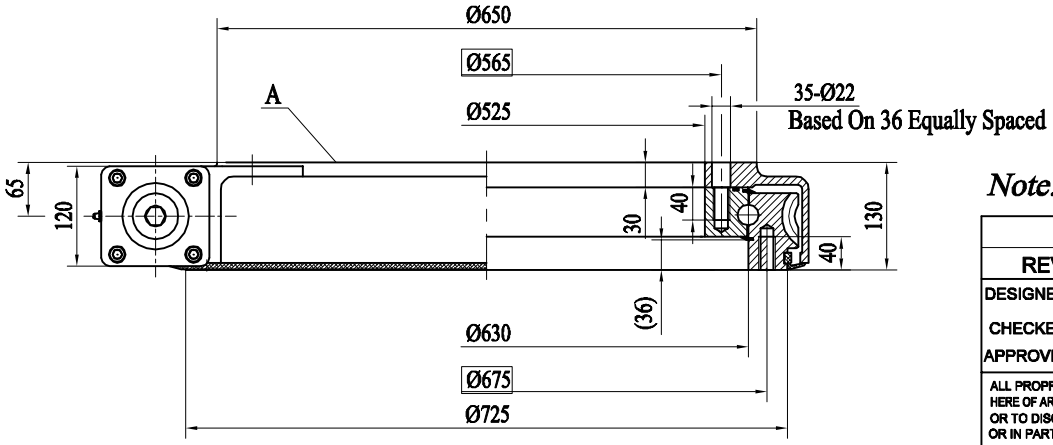

Note: Side A facing up when mounted.

REV	DATE	REVISER	DESCRIPTION

DESIGNED BY	15-08-2013	CNC MOBILE AND INDUSTRIAL HYDRAULIC
CHECKED BY	15-08-2013	
APPROVED BY	15-08-2013	

ALL PROPRIETARY RIGHTS IN THE SUBJECT MATTER HERE OF ARE RESERVED, AND NO PERMISSION IS GRANTED OR TO DISCLOSE REPRODUCE THIS PRINT IN WHOLE OR IN PART, ANY OF THE INFORMATION TO OTHERS.

WEIGHT	SCALE	Article No.	CNC-WE25-104-25H-R		Rev
199 kg	1:6				B
SIZE	A3	Title	SLEW DRIVE	Order No.	
SHEET	1 / 1				

SYMBOLE ISO